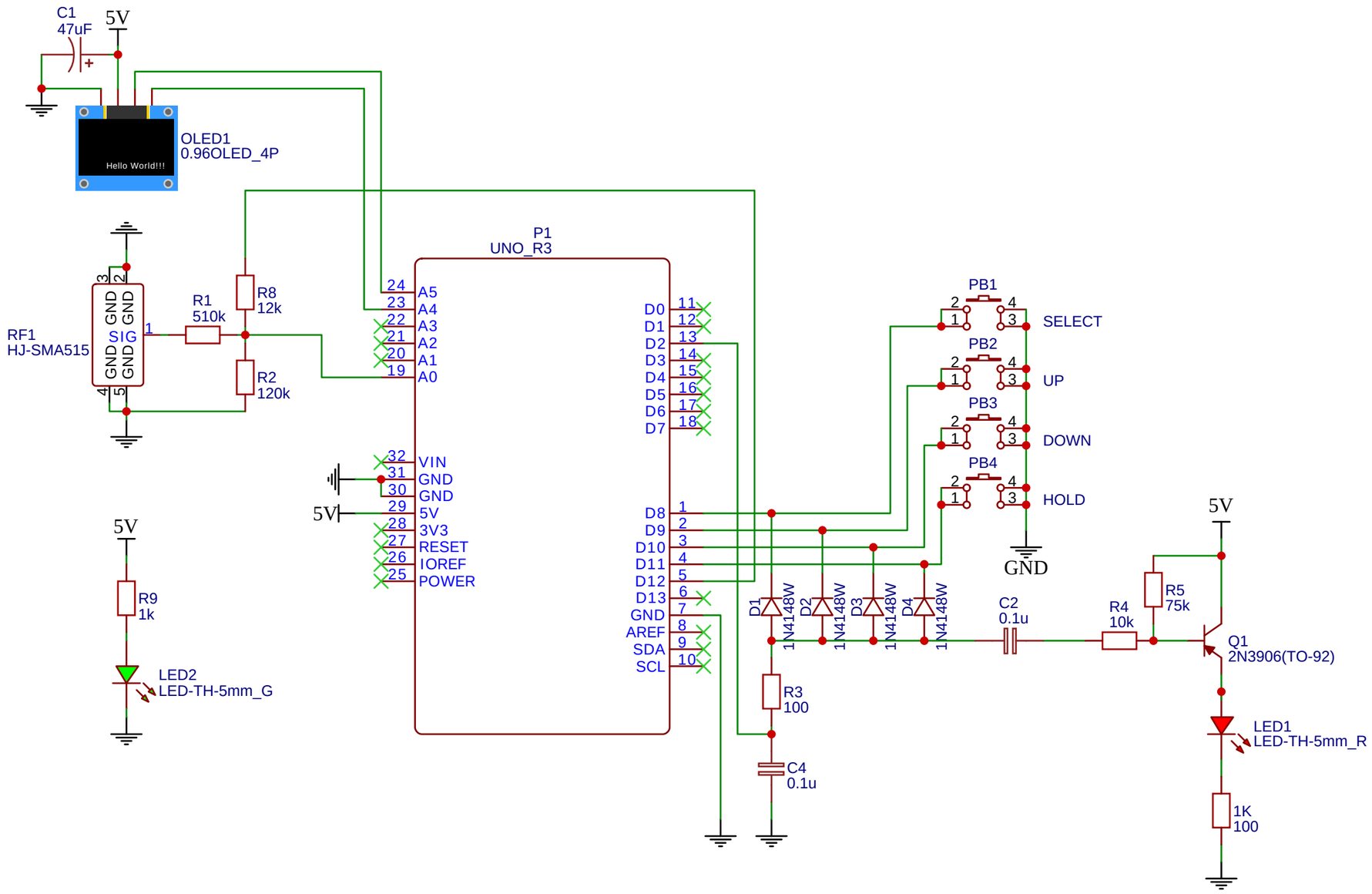

TITLE: Arduino UNO Kids Scope Shield	REV: 1.0
Date: 2022-05-05	Sheet: 1/1
EasyEDA V5.7.26	Drawn By: E.M.V.